4

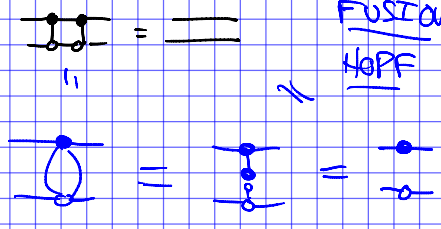

FUSION

HOPF

5

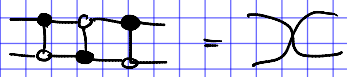

BIALGEBRA

FUSION

4

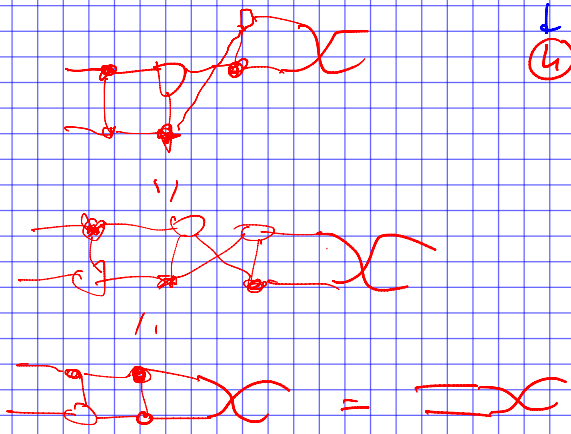

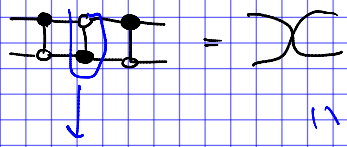

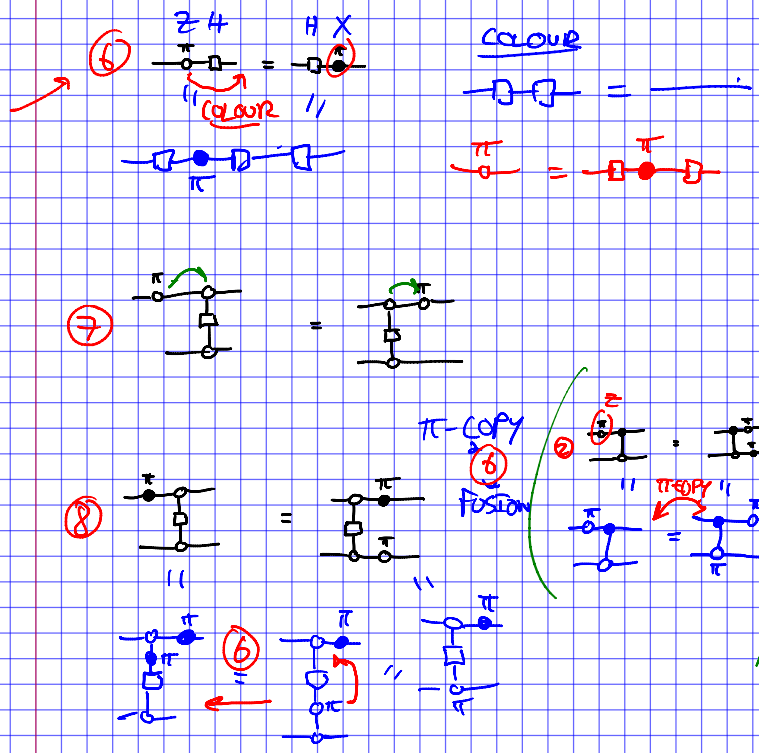
6
Z H
H X
π
COLOUR
COLOUR
π
7
π
π
8
π
π
π
π-COPY
6
FUSION
2
Z
π
π
π-COPY
π
π
6
π
π
π
π
π
π

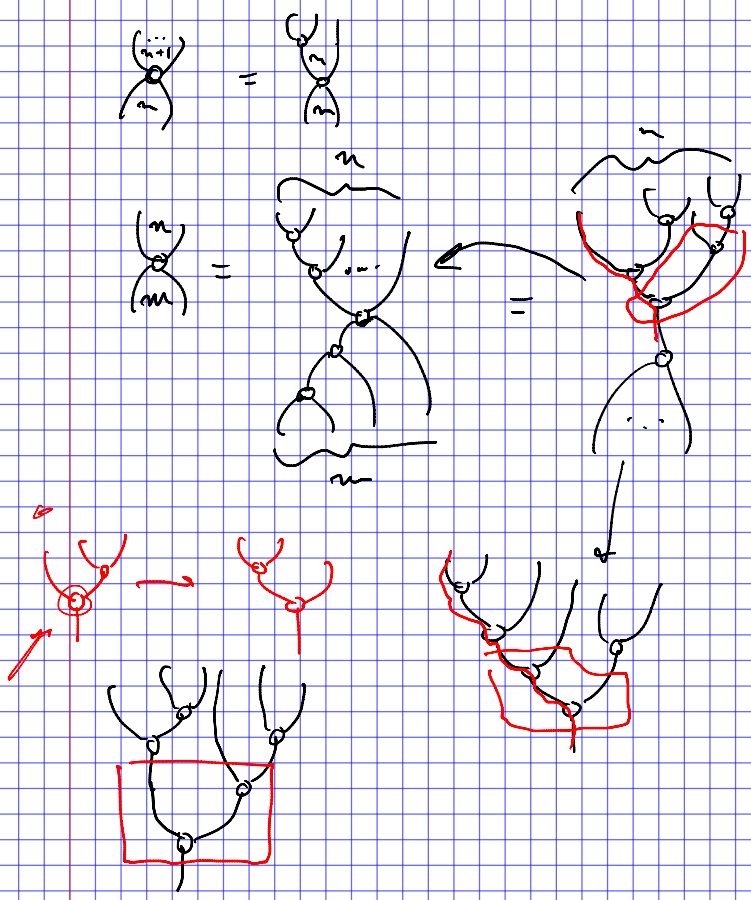
n+1
n
=
n
n
n
n
=
n
n
=
n
n